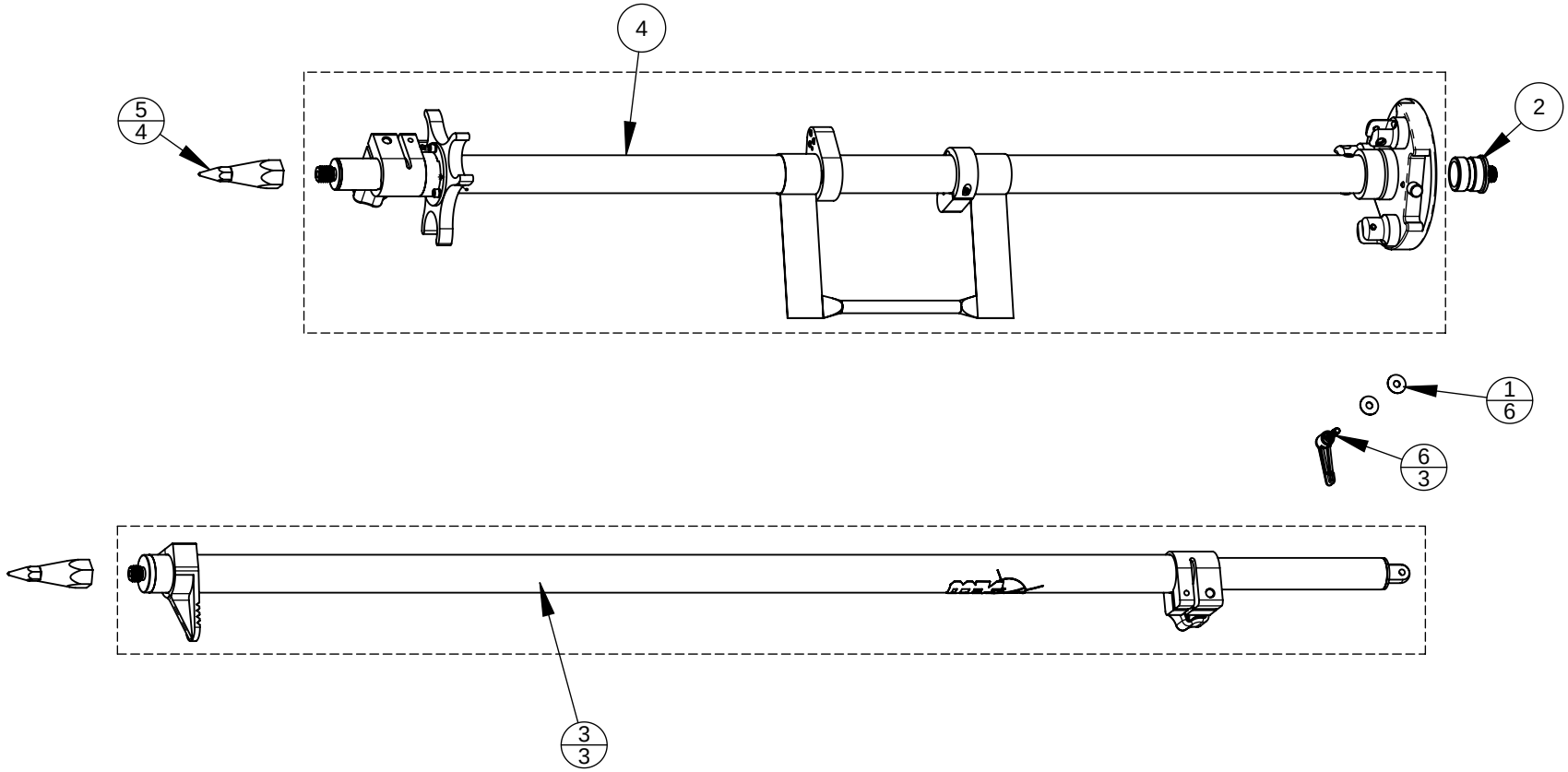

ITEM NO.	PartNo	DESCRIPTION	QTY
1	025TW	WASHER,NYLON,.265X.75X.025	6
2	2070-002	ADAPTER,PLUG,TRIBRACH	1
3	5119-10-051-XXX	LEG ASSY,HD GPS/MC TRIPOD	3
4	5119-10-053-XXX	CENTER POLE ASSY,HD GPS/MC TRIPOD	1
5	5194-03	POINT,HEX,DULL	4
6	MH-406SS	HANDLE,CLAMP,6MMX25MM LONG,SS	3

***NOTE**
Components may be sold separately.
Please see sub-assembly part number drawing for details.

5119-10-XXX | **TRIPOD,HD GPS/MC**

X ITEM#
X QTY

DATE: 1/11/2008
REV. A3 PAGE 1 OF 1

MANUFACTURING CO., INC.
4155 OASIS ROAD, REDDING, CA 96003